Electrolux PROFESSIONAL

Flexy Compact Refrigerated well on cupboard, static (2GN) with wheels, overshelf with LED lights, H=750mm

ITEM #

MODEL #

NAME #

SIS #

AIA #

322060 (F10C2KW02S)	Refrigerated well on cupboard, static (2 GN container capacity) with wheels, overshelf with LED lights and two stainless steel tray sliders, H=750mm (Nordic)

Short Form Specification

Item No.

Compact design, ideal for space saving environments. AISI 304 Foldable tray sliders on long sides. Unit mounted on 125 mm wheels 2 swivel and 2 with brakes. Soft closing doors on operator side. Underneath ambient cupboard with doors. A type AISI 304 overshelf equipped with LED lights designed for extra increased visibility on the surface for charming food display. Sleek, minimalist glass structure, food and dust does not get trapped and easy to clean. Curved glass. Sturdy body construction with laminated panelings on 4 sides. Designed to serve the food in gastronorm containers with a maximum height of 200mm. Food introduced at the correct temperature maintains its core temperature according to Afnor Standards. Automatic defrosting guarantees evaporators clearance and efficient well cooling. Digital control with temperature display with precise adjustment (0,1°C). Fully compliant HACCP digital controls include visible alarms. Wells in 304 AISI stainless steel with rounded corners to facilitate cleaning operations. The well is also equipped with a drain hole. High-density expanded polyurethane foam with cyclopenthane guarantees excellent well insulation to reduce energy dispersion. R290 refrigerant gas (GWP=3) to reduce environmental impact and increase cooling efficiency. The bottom is equipped with copper tubes to ensure proper cooling, with this system the air touches the cold surface and gets cooled. 750mm worktop height.

APPROVAL:

Main Features

- Precise temperature control and setting at 0,1°C .
- As standard the product comes with digitally controlled thermostat which is in line of HACCP norms and provides visual alarm as a warning of the increasing or decreasing temperatures.
- Designed to serve the food in gastronorm containers.
- Suitable for GN 1/1 containers with a maximum height of 200 mm.
- Food introduced at the correct temperature maintains its core temperature according to Afnor Standards.
- Automatic defrosting guarantees evaporators clearance and efficient well cooling.
- Perfect compact design makes it ideal for space saving environments.
- CB and CE certifed by a third party notified body.
- Soft closing doors on operator side.
- Underneath ambient cupboard with doors ideal for extra storage.
- Available options with online configurator: colors, tray sliders, overshelves, feet/wheels with desired diameter, height 750mm for kids.
- Overshelf equipped with LED lights.
- Optional plinth can be installed to cover the feet or the wheels.
- AISI 304 Tray slider in flush mounted stainless steel is installed on long sides and they can also be folded down to facilitate passage of the units through doorways.
- Ideal for servery lines without an operator.
- Unit mounted on 125 mm wheels 2 swivel and 2 with brakes.
- Stylish A type overshelf designed for extra increased visibility on the surface for charming food display.
- Curved glass.
- Available dimensions: 2, 3, 4 GN.
- Thanks to the sleek, minimalist glass structure, food and dust does not get trapped and the cleaning is made easier.

Construction

- Electronic control with temperature display.
- Well bottom is inclined to facilitate water drainage.
- Well in 304 AISI stainless steel with rounded corners to facilitate cleaning operations. The well is also equipped with a drain hole.
- IPx2 water protection.
- The bottom is equipped with copper tubes to ensure proper cooling, with this system the air touches the cold surface and gets cooled.
- Overshelf in complete AISI 304.
- Top in AISI 304.
- Sturdy construction with laminated panelings on 4 sides.

Sustainability

- Hydrocarbon refrigerant gas R290 for the lowest environmental impact (GWP=3) - CFC and HCFC free.
- High-density expanded polyurethane foam with cyclopenthane guarantees excellent well insulation to reduce energy dispersion.

The company reserves the right to make modifications to the products without prior notice. All information correct at time of printing.

Electrolux PROFESSIONAL

Flexy Compact
Refrigerated well on cupboard, static (2GN) with wheels, overshelf with LED lights, H=750mm

Front

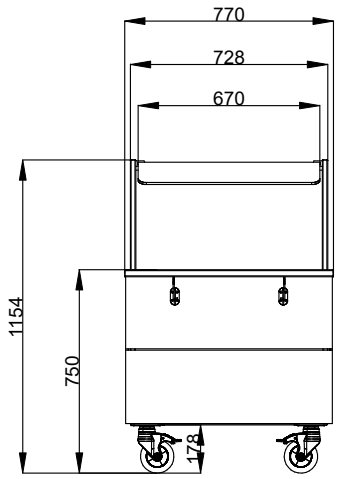

Side

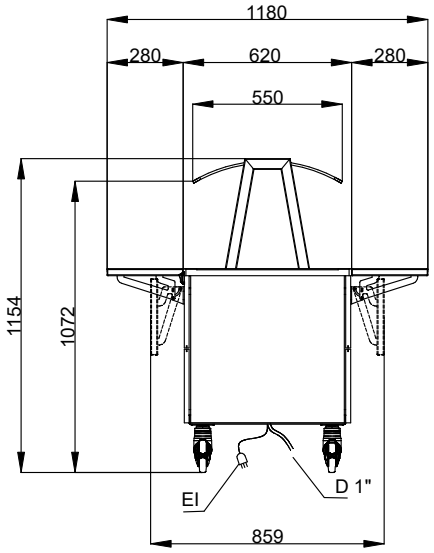

D = Drain
EI = Electrical inlet (power)

Top

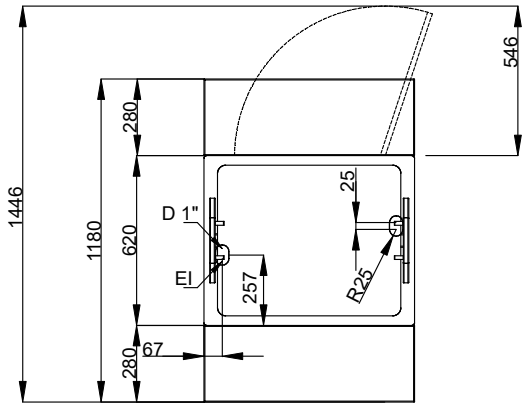

Electric

Supply voltage:	
322060 (F10C2KW02S)	220-240 V/1N ph/50 Hz
Electrical power max.:	0.45 kW

Key Information:

N° of doors:	1
External dimensions, Width:	770 mm
External dimensions, Depth:	1180 mm
External dimensions, Height:	1154 mm
Net weight:	109 kg
Shipping height:	1184 mm
Shipping width:	810 mm
Shipping depth:	899 mm
Shipping volume:	0.86 m³
Set temperature:	-15 / 0 °C
Top temperature:	-15 / 0 °C

Sustainability

Noise level:	60 dBA

The company reserves the right to make modifications to the products without prior notice. All information correct at time of printing.

2024.10.08